GEARS (General Engineering and ROV Specialists) SID - Float

An top-level diagram of all electronic systems used by our Float.

Fuse Calculations	
ESP32 MCU	0.2 A
Linear Actuator	1.5 A
Pressure Sensor	0.2 A
Total	1.9 A
Max Fuse for NiMH AA Batteries	2A

Above Water

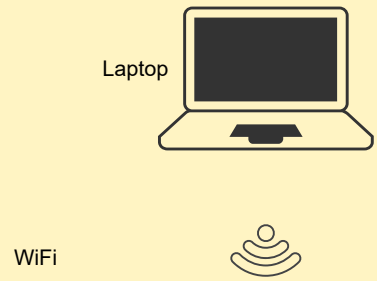
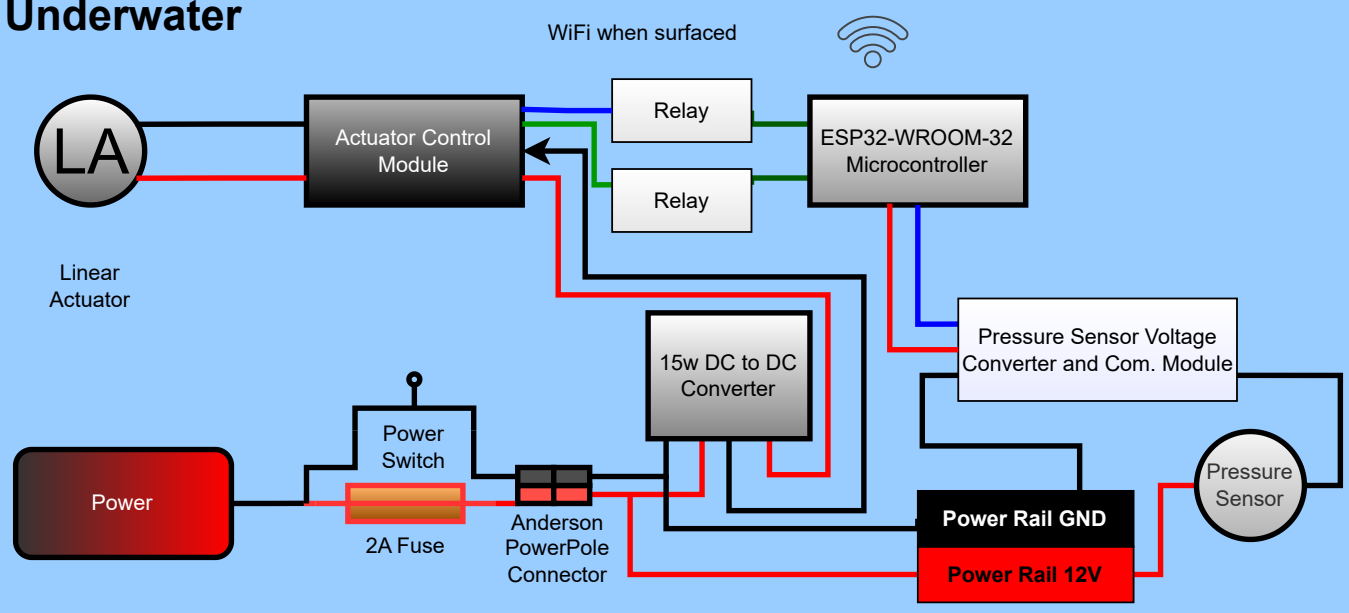
Underwater